Powder Spray Booth

Value • Flexibility • Performance



Feature :

- Economic ,Easy Operation, Good for Small Work Piece
- Durable, long-life powder-coated steel structure with high-quality galvanized canopy and floor
- Requires only quick, easy connect electrical and pneumatic to start production

COLO-S-1115

Application:

- This powder spray booth is an economical solution for basic powder coating operations,with filter powder collecting system.
- For job shops, first-time powder coating and to assist large in-house powder coating operations, this powder spray booths offer a variety of configuration options.



TECHNICAL DATA:

Model	COLO-S-1115	**Voltage**	380V
Booth Type	Closed	**Frequency**	50-60Hz
Operator dimensions	1000x1500x1000(W*H*D)mm	**Filters**	Polyester
Overall dimensions	1200x2000x1500(W*H*D)mm	**Filters count**	2
Weight	200kg	**Filters hang type**	easy for change
Power supply	Electric	**Filter cleaning system**	Pneumatic
Nominal power	1.5kWt	**Warranty**	12 months

Tunnel Powder Coating Booth

Value • Flexibility • Performance

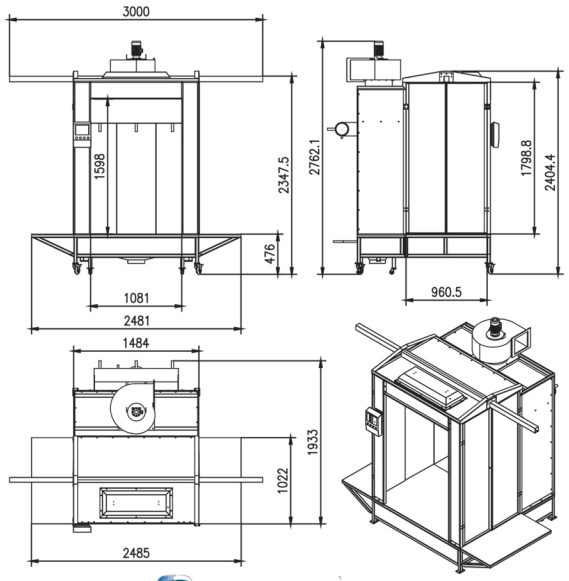

Tunnel Booths

- This booth is having side doors & article holding track entry & exit is from side through doors.
- By this way material handling is systematic i.e. from one side entry, coating & then exit from other side.
- If for spraying two side, could make 2 operation doors.
- In exceptional case, if article is very long then a door can be kept open & coating is done step by step by moving article slowly.
- In this case recovery will be reduced.





COLO-S-2152

Model:COLO-S-2152

Booth Type	Closed-drive-thru	**Frequency**	50-60Hz
Operator dimensions	1400*1800*1000(W*H*D)	**Filters**	Polyester
Overall dimensions	2500*2300*1500(W*H*D)	**Filters count**	3
Weight	450kg	**Filters hang type**	easy for change
Power supply	Electric	**Filter cleaning system**	Pneumatic
Nominal power	3.5kW	**Air consumption**	10,200m3/h
Voltage	380V	**Warranty**	12 months

Powder Spray Booth

The manual coating booth COLO-S series are ideal for small batches and highest quality.

Value • Flexibility • Performance

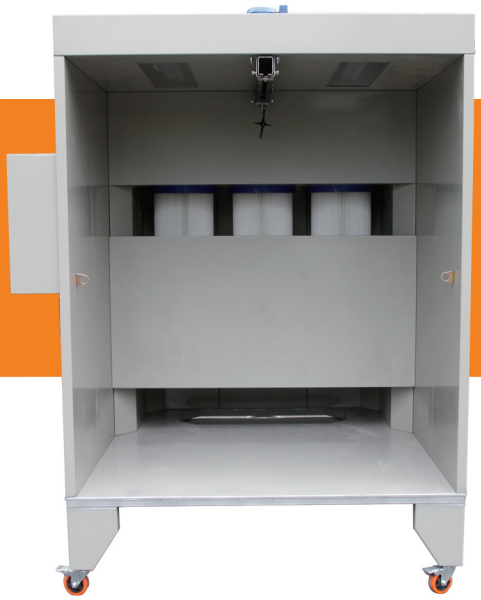

COLO-S-1517



COLO-S-2315



100% Polyester filters, quick-release type





simple PLC control unit

THE ADVANTAGES OF THE COLO-S BOOTH:

- Powder coated steel booth, moveable
- Delivered ready for connection
- Integrated Illumination
- Mobile powder collecting hopper
- Simplified filter cartridge for changing
- Supervision of minimal exhaust air volume

Technical Data	COLO-S-1517	COLO-S-2315
No.of filter elements	3	4
Extraction volume	4000 m3/h	6600 m3/h
Fan power,effective	2.2kw	4.0kw
Voltage/Frequence	3 phases 380V/50HZ (or as request)	
Compressed air consumption	15 m3/h/6bar input pressure	
Weight (approx.)	480kgs	580kgs

Booth dimensions

Width	1500(1580) mm	2300(2550) mm
Depth	1000(2000) mm	1500(2100) mm
Height	1700(/2150) mm	1500(2240) mm

Walk in Powder Coating Booth

Walk-in Booths

Walk in Booths (also called Cabin Booths) are ideal when coating large and bulky or heavy parts.

As the name suggests, after the part to be coated has been rolled into the cabin, the operator walks in and coats the parts from all sides.

These parts are then rolled out directly into the powder curing oven.

These booths find use in batch system for control panels, cabinet, large iron cast products, etc.

Walk in Booths also could have mono Cyclones as a recovery system.



COLO-S-3222



COLO-3924

Model	COLO-S-3222	COLO-3924	COLO-3217
Working dimensions	W2300 *H1850 *D1500mm	W3900 *H2400*D2400mm	W3000 *H2000*D1700mm
Overall dimensions	W2504 *H2169*D2002mm	W4013 *H3347*D2713mm	W3203 *H2168*D2200mm
Filters count	4 pcs.	12 pcs.	5 pcs.
Nominal power	4kw	5.5kw	4kw
Nominal voltage	As required	As required	As required
Air consumption	4000m3/h	8000m3/h	4000m3/h