MONO-CYCLONE POWDER COATING BOOTH

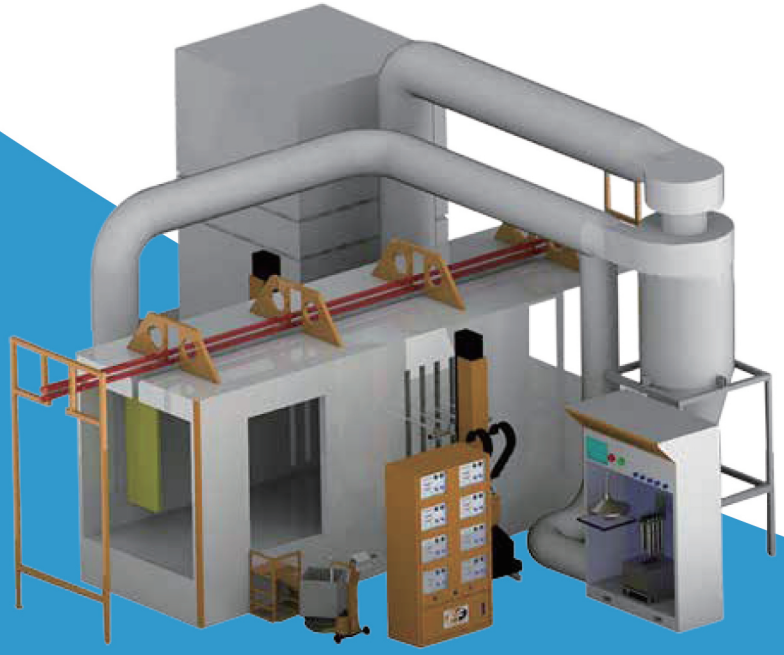



Cyclone bottom cone bucket can be quickly separated from the barrel for easy cleaning.

Mono-cyclone fast color change powder coating booth

The bottom of spray booth equipped with an automatic device and automatically air knife keep the bottom always no Powders stay

MONO-CYCLONE SEPARATOR



- Mono-Cyclone single-tube structure makes clean up shorter color change.
- Mono-cyclone separation rate of up to 98%.
- Disc Cone bucket and cylinder junction of the filter shaking motor efficiency vibration screening.
- Removable disk cleanup filter with change
- Bevel the bottom of the bucket can be configured to work in alternate double balloon valve.
- Bevel the bottom of the bucket can be configured to pump fluidized powder + powder pump delivery forms.
- Exhaust pipe at the bottom end face of the circular cover plate can be quickly disassembled for cleaning

Plastic Powder Coating Booth

Plastic powder coating booth for fast color changes !





Comparing with the metal spray booth, the PVC powder coating booth has obvious technical advantages;

- In the high-voltage electrostatic field,inner wall of PVC booth brings the charge with the same polarity as the powder particles, making the inner wall's rebound effect on the powder particles because of homogeneous repulsion,so that more powder can gather to the workpiece, which effectively improve the spraying efficiency.
- Less powder adsorption to the inner wall makes less powder go through the powder coating equipment, achieving high powder utilization to save powder.
- High efficiency of the bottom exhaust, matching with the discharge device of "large-diameter double-whirlwind powder separator + terminal filter", makes the least powder accumulation and the most environmental-friendly emission.
- Air compressed gun can easily blow off the powder that has attached to the booth wall, helpful to rapid cleaning.
- According to the production requirment, you can choose appropriate type of automatic powder coating control center to improve the main task of spraying, to save time and energy.
- Variable frequency stepless speed regulation reciprocator can carry automatic spray gun perfectly, and complete the spraying task successfully.
- Optional powder self-recycling feed center ensures maximum utilization of powder and least waste,so you don't need to worry about the automatic powder recovery, filtering and powder return to the powder hopper

FAST COLOR CHANGE POWDER COATING BOOTH



OPTIONAL

A variety of bottom recycling methods are available for customers to choose from, suitable for all types of workpieces.



A



B



C

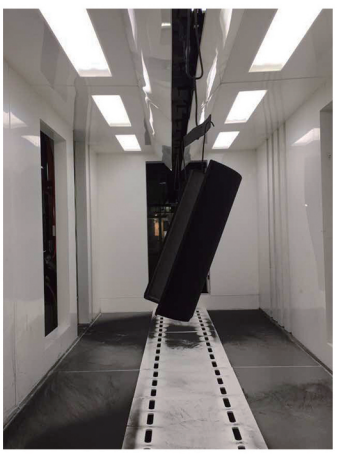

D

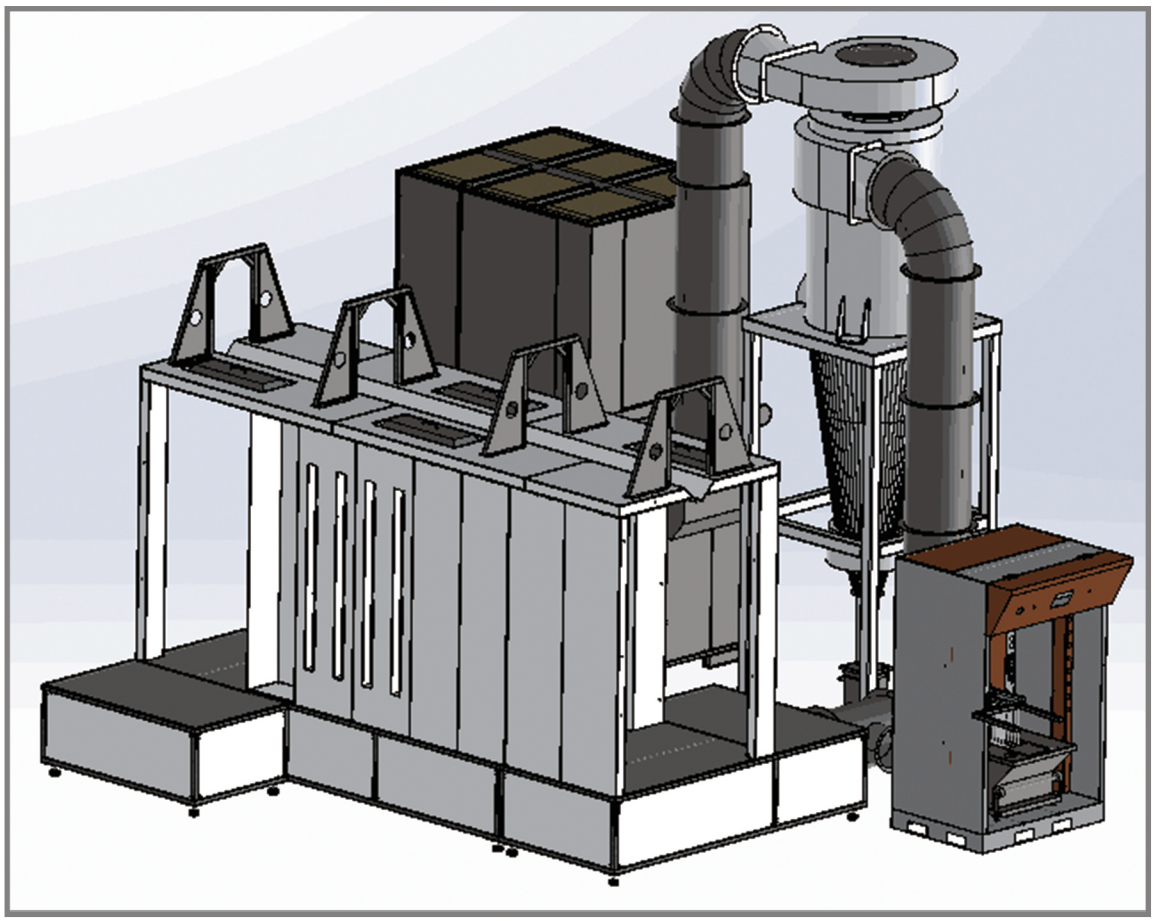

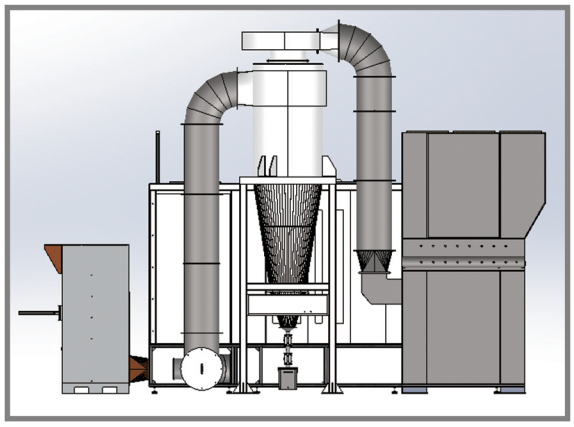

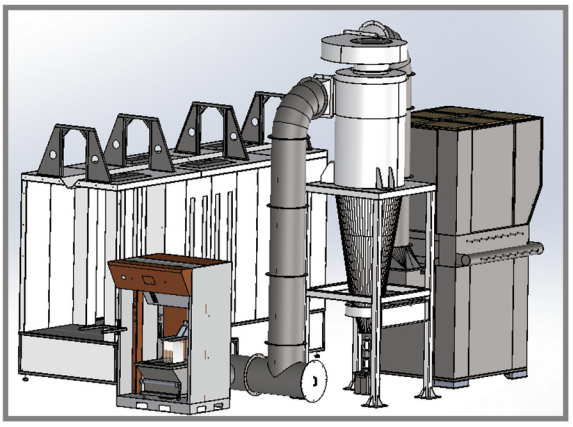

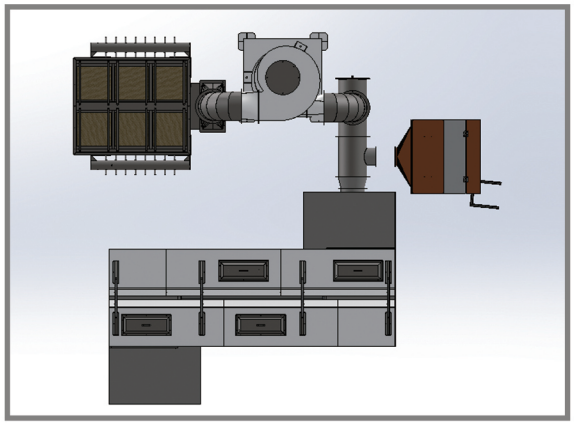

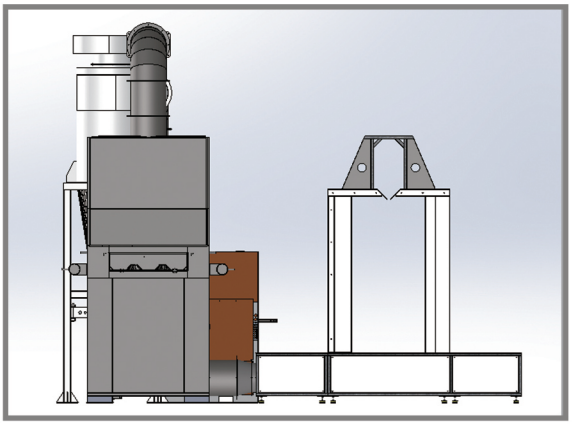

Multi- cyclone Powder Coating Booth

Multi-cyclone +Post filters recovery system-for easy mobility and faster clean up operation





Multi Recovery System

- Multi-pipe type small cyclone make the contact area of powder sepeparation more .
- Molding guide vanes make ventilation more stable uniform volume and the bottom of the powder hopper quickly removed and the side access windows make clean up easier.
- Compact structure, small size, not require so many in the space for workshop.
- You can choose to configure multiple small cyclone unit performed easily and quickly change color.

After filter system

- Multiple filters make filtering area enough.
- The efficiency of filter is up to 99%.
- The precision of filer can reach 2-5 microns.
- Advanced rotary wing filter for cleaning system.
- Automatic pulse-type counter blowing cleaning control models make the operation condition of the filter better and longer life time.
- Air package to ensure that the air flow and air pressure toclean up when you make a more thorough clean-up.
- Several side access window clean-up easier.
- Top-mounted exhaust fan with ventilation so that the form of least resistance.
- Top fan room side panel can be removed to facilitate later maintenance.

Model	COLO-S-Multicyclone
6	5100-8100m3/h
9	7650-12150m3/h
12	10200-16200m3/h
16	13600-21600m3/h